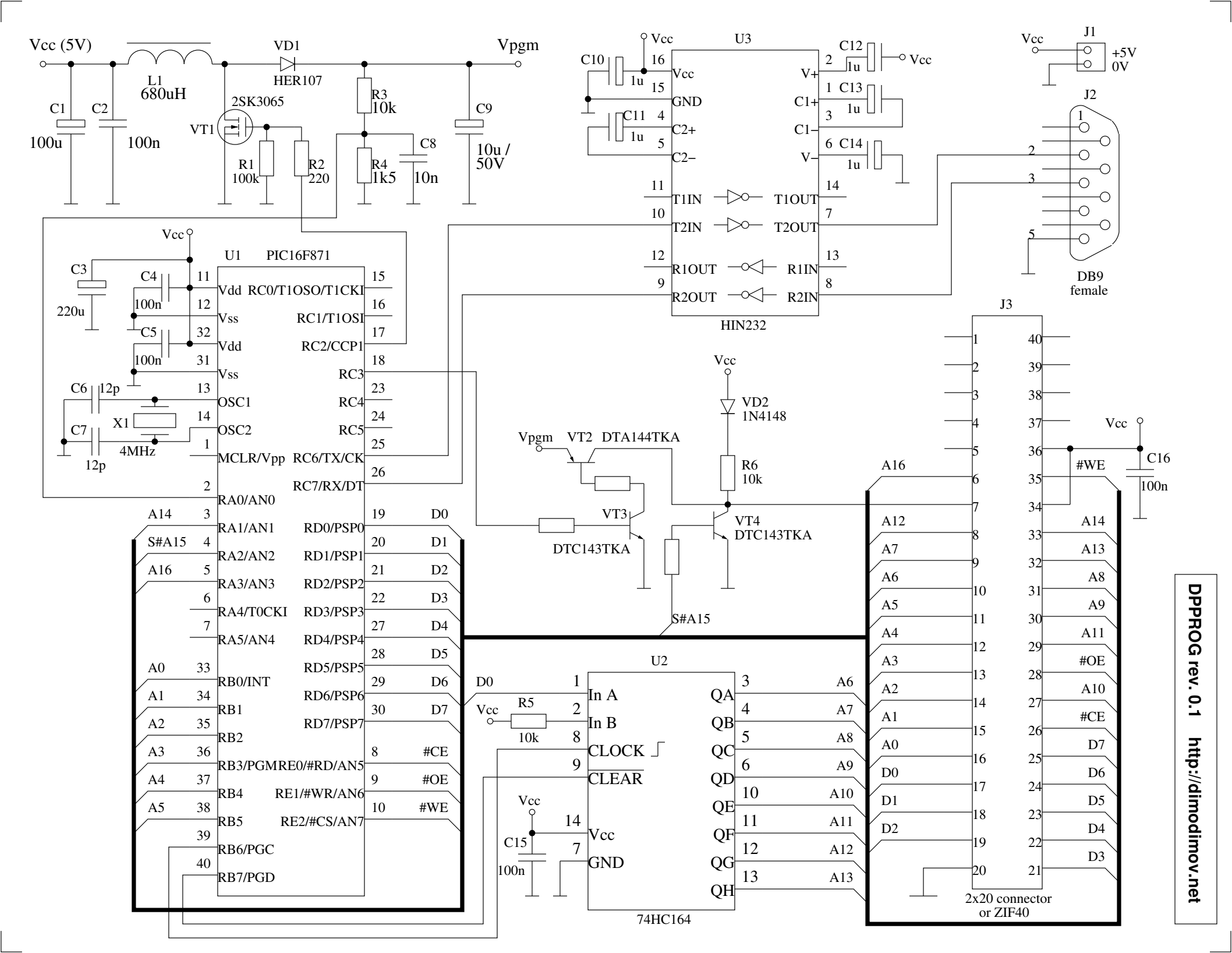
Vcc (5V)
L1
680uH
VD1
HER107
Vpgm
C1
100u
C2
100n
2SK3065
VT1
R1
100k
R2
220
R3
10k
R4
1k5
C8
10n
C9
10u /
50V
U3
HIN232
C10
1u
C11
1u
C12
1u
C13
1u
C14
1u
Vcc
GND
C2+
C2−
V+
C1+
C1−
V−
T1IN
T2IN
R1OUT
R2OUT
T1OUT
T2OUT
R1IN
R2IN
J1
+5V
0V
J2
DB9
female
U1
PIC16F871
C3
220u
C4
100n
C5
100n
C6
12p
C7
12p
X1
4MHz
Vdd
Vss
OSC1
OSC2
MCLR/Vpp
RA0/AN0
RA1/AN1
RA2/AN2
RA3/AN3
RA4/T0CKI
RA5/AN4
RB0/INT
RB1
RB2
RB3/PGM
RB4
RB5
RB6/PGC
RB7/PGD
RC0/T1OSO/T1CKI
RC1/T1OSI
RC2/CCP1
RC3
RC4
RC5
RC6/TX/CK
RC7/RX/DT
RD0/PSP0
RD1/PSP1
RD2/PSP2
RD3/PSP3
RD4/PSP4
RD5/PSP5
RD6/PSP6
RD7/PSP7
RE0/#RD/AN5
RE1/#WR/AN6
RE2/#CS/AN7
A14
S#A15
A16
A0
A1
A2
A3
A4
A5
D0
D1
D2
D3
D4
D5
D6
D7
#CE
#OE
#WE
VD2
1N4148
R6
10k
VT2
DTA144TKA
VT3
DTC143TKA
VT4
DTC143TKA
S#A15
U2
74HC164
In A
In B
CLOCK
CLEAR
GND
QA
QB
QC
QD
QE
QF
QG
QH
R5
10k
C15
100n
J3
2x20 connector
or ZIF40
C16
100n
DPPROG rev. 0.1 http://dimodimov.net